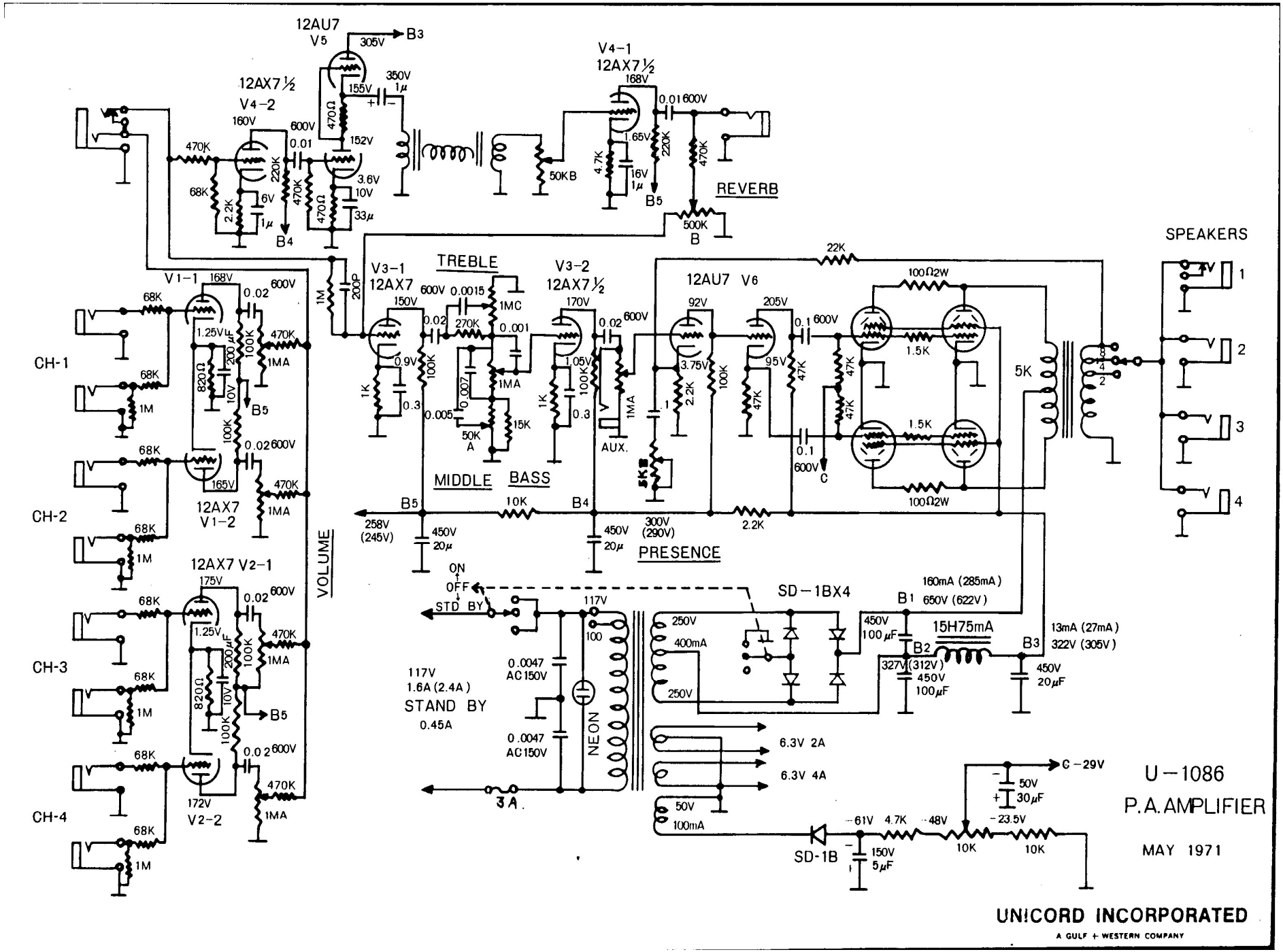
12AU7
V5
305V
B3
12AX7½
V4-2
160V
600V
0.01
470K
68K
2.2K
6V
1μ
B4
220K
470K
470Ω
152V
3.6V
10V
33μ
155V
350V
1μ
V4-1
12AX7½
168V
0.01
600V
1.65V
4.7K
16V
1μ
220K
470K
B5
50KB
REVERB
500K
B
SPEAKERS
1
2
3
4
V1-1
168V
0.02
600V
68K
1.25V
200μF
100K
470K
1MA
820Ω
10V
B5
CH-1
1M
CH-2
165V
12AX7
V1-2
CH-3
12AX7 V2-1
175V
1.25V
200μF
100K
470K
1MA
820Ω
10V
B5
CH-4
172V
V2-2
VOLUME
1M
200P
V3-1
12AX7
150V
600V
0.0015
1MC
0.02
270K
0.001
0.9V
100K
1K
0.3
0.007
1MA
0.005
15K
50K
A
TREBLE
MIDDLE
BASS
V3-2
12AX7½
170V
0.02
600V
1.05V
100K
1K
0.3
1MA
AUX.
5KB
12AU7 V6
92V
205V
3.75V
100K
2.2K
47K
95V
0.1
600V
47K
47K
1.5K
1.5K
0.1
600V
C
22K
100Ω2W
100Ω2W
5K
B5
10K
B4
258V
(245V)
450V
20μ
450V
20μ
300V
(290V)
2.2K
PRESENCE
ON
OFF
STD BY
117V
100
117V
1.6A (2.4A)
STAND BY
0.45A
0.0047
AC150V
0.0047
AC150V
NEON
3A
SD-1BX4
250V
400mA
250V
450V
100μF
B1
160mA (285mA)
650V (622V)
15H75mA
B2
327V (312V)
450V
100μF
B3
13mA (27mA)
322V (305V)
450V
20μF
6.3V 2A
6.3V 4A
50V
100mA
SD-1B
-61V
4.7K
-48V
150V
5μF
10K
-23.5V
10K
C -29V
50V
30μF
U-1086
P.A. AMPLIFIER
MAY 1971
UNICORD INCORPORATED
A GULF + WESTERN COMPANY